12th Iranian Conference on Intelligent Systems
Higher Education Complex of Bam, Bam, Iran
February 04-06, 2014

Three levels of information processing: improvement using personality

Maryam Tavakoli, Maziar Palhang
Electrical and Computer Engineering Department
Isfahan University of Technology
Isfahan, Iran
mry.tavakoli@ec.iut.ac.ir, palhang@cc.iut.ac.ir

Mohammad Kazemifard
Department of Computer Engineering
Razi University
Kermanshah, Iran
m.kazemifard@razi.ac.ir

***Abstract*— Cognitive architectures are subset of general agent architectures, which try to model human cognitive process for intelligent agents. Modeling emotional process in these architectures was followed by many researchers. Ortony et al. [1] proposed three levels of information processing, reactive, routine and reflective, with four functions, perception, affect, motivation, cognition, and behavior Kazemifard et al. [2] implemented and detailed this model in a multi-agent system. The undeniable effect of personality on emotions and many proving experiments demonstrated that a critical function is missing in this model. This deficiency becomes bolder when the environment is multi-agent. In this paper, Kazemifard et al. [2] is improved within two ways. Firstly, using Five Factor Model of personality, another function, personality, is introduced, and its interactions with other functions are explained. Secondly, effective sociality is constructed among agents with different personalities to improve sharing of knowledge and subsequently helpful cooperation. This is important since the fundamental benefit of multi-agent environment is decentralized exploration. Finally, this architecture is implemented in a predator-prey environment, and its selective applications are discussed.**

Keywords-component; Three level of information processing; Emotion; Personality; Cognitive architectures; Predator-prey simulation; Multiagent system;

I. INTRODUCTION

Russell et al. indicated that intelligence has had four definitions during artificial intelligence history: thinking rationally, acting rationally, thinking like human, and acting like human. The third definition created a field named "Cognitive Science". Several studies in this field helped creating a category of agent architectures, known as "Cognitive Architectures." [3] Agents with these architectures are "*Cognitive Agents"* having the following characteristics. "(1) They have cognitive knowledge processing abilities; (2) they can have personalities and can detect personalities of others; (3) they are sensitive to emotional inputs and they can understand emotions of self, as well as of others; and (4) they can use the understood emotions (of self and/or others) for further knowledge processing and actions" [2].

Three level of information processing is proposed by Ortony et al. [1] and then implemented and detailed by Kazemifard et al. [2]. In the kazemifard et al. [2] implementation, all the agents are similar to each other, and the differences are just in their age and experience. This similarity limits the agents' exploration. This study is designed to improve this weakness using personality and knowledge sharing between agents.

The following paper consists of section 2 as background information required for the rest of this article, section 3 which briefly reviews related emotional and personality based agents, section 4 and 5 which present our contribution, the implementation details and environment and finally section 6 provides conclusion, application, and the perspective of our future works.

II. BACKGROUND

In this section, some background knowledge required for rest of the paper is reviewed. First, the structure of three level of information processing will briefly explained, and then the utilized personality model is studied.

A. Three level of Information Processing

Three level of information processing is an emotional architecture proposed by Ortony et al. [1] integrated four functions – affect, motivation, cognition, and behavior – into three levels – reactive, routine, and reflective. This model implemented and detailed by Kazemifard et al. [2]. Kazemifard et al. [2] clarified the information flows of affect, motivation, cognition, behavior as well as perception through the three levels.

Based on Kazemifard et al. [2], we have the following description for each function and level.

1) Perception processes information that agents sense from the environment. There is a filtration for each level.

2) Affect processes the feeling of the agent using perception and information from other levels. Emotions will process within level of architecture. In the lowest level we have just proto-affect with positive and negative values. However, these become eight emotions in reflective level.

3) Motivation processes the agent desires and needs. This function uses the affect function to set agent's preferences.

4) Cognition is the main knowledge and learning part. Within this function agents keep their idea, knowledge, and

believe. It uses the processed affect to decide for the best action.

5) Behavior uses all the other functions to choose the best action to influence the environment.

Emotion processing is developing within this model from reactive level to the reflective. The value of this architecture lies in the emotion modeling and its effect on decision making in artificial agents.

The lowest level, reactive, manages simple emotions that reflect the present state of the agent. This level use classical conditioning that matches pairs with each other. This level only learns the concurrent pairs, and uses them as if-then-else rules. The next one is in routine level. This level uses Case Based Reasoning which keeps situations, results, and the frequency they have happened. Here, emotions not only represent current situation, but also some sense of future prediction is hidden in them. The most advanced level is reflective level. This level utilizes a Q-learning algorithm, and fuzzy rules. It considers all the time, past, present, and future. The fuzzy rules let agent decide based on the current emotions. The learning algorithm let it to learn the best reaction in new situations. Since the states of Q-learning are based on emotions, the Q-table is not as huge as when it wants to process raw sensor inputs.

B. Personality

Previous work with this model showed that all the agents in the environment were similarly working. In order to be most human-like, we need a parameter to make them individuals. For humans, a systematic approach for explaining these individual differences in behavior, emotion, motivation, and cognition, is the use personality. By definition, "Personality is a pattern of behavioral, temporal, emotional, and mental traits distinguish people from one another" [4].

Castelfranchi et al. explained many reasons for agents' need of personality. From those, the first one is our main goal in AI, human society modeling. This modeling, in nature, requires agent to have implicit or explicit personality. Another reason is believability of the agents for human audiences. Finally, in our idea two most important reasons are completing internal states and parameter of agent and giving the chance of better exploration to the society of agents [5].

One of the main aspirations of multi agent environment is distribution of calculation and exploration. When all the agents are similar to each other, the search space would become limited. Different and asymmetric agents let them expand their exploration experiences. After that social interaction lets them share their results, and improve each other's performance.

Our study is to create this function based on an appropriate human personality model, and place it in a suitable place in each level of information processing. From all models and theories of personality, e.g. Keirsey, PEN, MBTI, etc, the one that mostly used in AI is Five Factor Model (FFM) of personality (or Big Five).

C. Five factor model

In psychology, one of the popular personality models is Five Factor Model (FFM) which is defined by Norman and discusses human personality on five aspects with a number between zero to one [6]. The acronym of these five factors is OCEAN[1], which mostly used to reference this model. There are some experimental evidences of covariation between each of these factors function and a brain region (except for openness) [7].

Historically, Extroversion and Neuroticism were two first parameters accepted as "Big Two". Later on, Agreeableness, Conscientious, and Openness were added to them [8]. The five dimensions used in this model are as explained below:

1) Extroversion: This feature relates to someone's tendency to talkativeness and seeking stimulation in company of others [9]. The degree of this element covaries with medial orbitofrontal cortex, a brain region involved in processing reward information [7,10].

2) Neuroticism: This feature refers to the level of emotional stability or vulnerability [9]. Experiments demonstrate covariation between this aspect and brain regions associated with threat, punishment, and negative affects [7,10].

3) Agreeableness: This feature presents the ability and trend to be sympathetic and cooperative with others [9]. The level of this factor covaries with regions of the brain responsible for information processing and predicting mental state of other individuals [7,10].

4) Conscientiousness: This feature shows ability of person to plan and do jobs in an organized manner [9]. Experimental evidences relate this feature to the lateral prefrontal cortex, a region involved in planning and voluntary control of behavior [7].

5) Openness: This feature reflects the degree of intellectual curiosity, creativity, and tendency to explore new experiences [9]. Openness is the only feature which positively associates with intelligence. DeYoung et al. hypothesized that this element associates with all of the regions controlling working memory, attention, and reasoning [7,11].

III. Related Works

During the last decade there have been many convincing articles on "importance of personality" in artificial agents. While some of them try to formulate personality in order to make believable agents for special purposes, others try to make computational models for general architectures.

Ortony discussed about characteristics of believable agents. He believed that behavior of these agents should match their motivations and they also need to have appropriate internal responses (emotions) to the situations as well as external responses (behaviors). They should have a kind of consistency and a level of predictability in their responses, which is their personality [12].

André et al. discussed the necessity of having affect and personality in three different projects: Puppet, a virtual reality work, Inhibited Market Place, whose aim is to

[1] Openness, Conscientiousness, Extroversion, Agreeableness, Neuroticism

communicate information via simulated dialogues, and Presence, a virtual leader [13]. Also, Rizzo et al. presented a goal-based personality model for agents. Their aim was to create a model to make an agent believable for human audiences [14,15]. Allbeck et al. analyzes animation gestures based on their emotion and personality. Using the OCC model [16] of emotion and OCEAN model of personality they argued that for a believable human-like animation, emotion, mood and personality are necessary [4]. Although these works were successful in modeling emotion and personality, they were proposed for special use, and they are not general architectures. Egges et al. created a generic framework for conversational agents. They wanted to create agents with emotion and personality, so they linked the OCC model of emotion and the OCEAN model of personality with some linking matrices [17,18]. Zachary et al. developed a personality-enabled architecture (PAC). This architecture was designed for using stand-alone, or integrated with existing cognitive architectures [8].

Since the audiences of these architectures are mainly humans (not multi-agents,) the above architectures did not consider relation and cooperation between agents. P´erez-Pinillos et al. worked on an intelligent agent with motivation, emotion, and personality. The only weakness of this work is the lack of social interaction among agents. Consequently, in personality part they couldn't model extroversion and agreeableness [19].

Talman studies two personality parameters, agreeableness and conscientious, and the effective way of negotiation between agents with different personalities. She believes that agreeableness shows the level of cooperation and conscientious demonstrates the agent's reliability [20]. Cristiano et al. developed a system, GOLEM, which experiments different levels of cooperation among agents with various personalities and social attitudes [21]. Even though these systems talk about personality and cooperation among agents, emotions are still missing in their designs. We need a general emotion-based architecture, which not only supports personality, but also manages cooperation and relation among agents with different personalities.

This article is aimed to cover these works' limitations. Therefore the three level of emotional processing and the OCEAN model of personality are used. This model has a strong background and also physiological witnesses for personality modeling. It enables agents with different personalities to communicate and share their knowledge with each other.

Besides, Ortony et. al. [1] believes that using three level of information processing for modeling personality lets us improve previous researches on personality, which concentrate on one domain at a time.

IV. METHODOLGY

Ortony et. al. [1] believe that personality could be implemented in this architecture using three levels and four domains' content and parameters. They believe that current definitions and modeling of personality only focuses on one main domain at the moment. However, each personality could be effective in more than a domain in different manners. They believe these domains work independently, so the value of a factor in one domain cannot predict the others'.

The OCEAN personality parameters in the three level of information processing architecture were modeled using Ortony et. al. [1] and FFM personality model. Differences in affect domain of reactive level are influenced by variation in extroversion and neuroticism. Since affect domain flows through all three levels of architecture, these two factors will influence affect domain in all three levels.

As extroversion and agreeableness are social factors which influence on our routine habit, they should have influence on routine level. Extroverts have tendency to contact people to get more support and validation, where agreeable individuals tend to be in touch with others due to their sympathy and understanding of others. As a result, these features may modify the agent's motivation.

Openness seems to reflect the tendency to explore more than exploit. This fact is modeled by motivation domain of routine level. As discussed in previous studies [12,11] openness and conscientious are high level factors. Therefore, differences in openness are the result of diversity of cognitive functions. Hence this factor is modeled in the cognition component of reflective level. Using this methodology, personality is applied to the implementation of three level of information processing in predator prey environment.

V. IMPLEMENTATION

In order to test the architecture, this section briefly explains the implementation details of modified architecture in predator-prey environment as well as the effect of personality in this implementation.

A. Environment

Predator-prey environment -used previously by Kazemifard et al., [2] was employed for implementing this architecture [2,22]. Since similar environment has been utilized, the results are comparable. This environment is easily understandable and can cover a wide variety of parameters.

The environment consists of 54*51 discrete squares, and contains three different types of agents including prey, predator, and grass. Predators do their job on a random manner. They run to a random direction, and if the situation let them they mate or eat preys. Grasses on the other hand, have no special job except growing. The grasses grow on a monotonic rate within first 1000 cycles in a random place. Subsequently, their growth will stop and the amount of grass in the environment will reduce over time.

Preys are intelligent agents of the environment. Their goal is to live as much as possible. They have some possible actions, and use the proposed architecture to choose the appropriate behavior each time. Preys are attacked by predators and depending on their resistance, lose energy. They eventually die when they ran out of energy. The prey would die when its energy is exhausted. Predators in this environment would never die. The simulation is ended when all preys die.

B. Details of prey's implementation

Preys in this environment have four primitive emotions including joy, distress, hope and fear as well as four advanced emotions including satisfaction, disappointment, relief, and fear-confirmed.

Possible motivations are eating, romance, tranquility, physical exercise, and social contact. These motivations are based on Maslow's hierarchy of need [23].

Prey agents have these possible actions: search for conspecific, approach to prey, mate, search for grass, approach to grass, eat, head to opposite direction, exercise, contact for energy, contact for resistance, escape, rest, think, search, and have no behavior. Each prey can percept all agents with distance less than its defined sensitivity around itself, and can move at most one square per step. The environment is not fully cooperative or competitive for preys. Preys can share food, resistance and knowledge if stay beside each other. However, they have some sense of competition on the food sources.

C. Prey's personality

By considering agreeableness as a cooperation factor [20] an agreeable agent is expected to have tendency to share food and resistance. This will effect on arousing social contact motivation, and prone them to accept others' knowledge. Motivation and cognition relate to routine level and reflective level respectively.

An extrovert agent prefers to share knowledge, tends to get more positive feedback and will experience more joy. It will also stimulate social contact motivation in routine level. The more neurotic an agent is, the more fear it would experience. Therefore, for these two parameters, affect function of reactive level will be influenced.

Openness lets the agent explore new ideas. The effect of this parameter can be noticed by not choosing the best known action and stimulating curiosity in cognition and motivation function respectively. Conscientiousness results to an obsession in performing tasks accurately. This make conscientious agent to think and consequently reference to reflective level more. Here, personality causes the behavior function of the routine level interrupt the reflective level in order to get help.

As mentioned above, personality will influence the affect, motivation and affect as well as affect and cognition in reactive level, routine level and reflective level respectively. Figure 1 illustrates the stream of personality influencing other functions.

At first we consider personality features as continuous parameters. Since continues parameters are complicated, and create an infinite four dimensional field, in the next versions, we fuzzificate the parameters into discrete values. Value ranges are divided into two categories: low, and high. This results in 32 different personalities.

Different personality can access different knowledge. Our ideal is to help agents to share information with a matched agent. In addition, some personalities may try to maximize their energy, while others try to make better resistance. Sharing these differences results in improvement of all group members. This is one of the main goals of multi-agent systems. In the next section we bring an example of knowledge sharing for continuous openness and then compare the results with previous versions.

VI. Results and applications

Implementing the architecture as explained resulted in different preys' behavior based on their personality. In this section some results of this implementation has been reviewed and discussed.

A. Results and discussion

Implementation of the modified architecture illustrates interesting results. Behaviors of preys with different personalities were remarkable. By using a modification in sharing algorithm, in an asymmetric environment, improve average preys' lifetime were improved.

In order to make each factors' outcome clear, agents were implemented with each personality factor separately. Table 1 shows the average total result of the environment for agents with different personalities and Table 2 illustrate agent's behaviors with different personalities. The initial values of simulation are compatible with previous works [2]; it starts with 100 preys and 25 predators. These results were extracted from averaging of 100 runs. In reviewing each personality factor, others are inactive and have no effect on the agents' behavior. It should be mentioned again that the presented data are only part of the results and not the complete one. However, our effort was to present a brief summary which can clarify the whole idea.

In order to clarify the effect of a heterogeneous world, the simulation is tested with agents who have normal distribution of different openness. Also, we considered previous version of the architectures' results as a conscientious agent, since it is very sensitive in performing tasks precisely with regard to architecture plan while other agents let their personalities change the outcome of the architecture.

As you can see in table 1, average mate in extrovert and agreeable agents were significantly higher than other agents. While agreeable agents exhibited significantly higher social contact rate, extroverts had the same social contact as others. This is due to the fact that social contacts in this environment are both giving and getting, which contains both benefit and loss. Therefore this won't be a motivation for extroverts who look for benefit in their interactions. However, it is a desirable behavior for agreeable agents who are kind enough to look for any social interaction.

At the same time, neurotics in compare to stable agents do more opposite direction movement but have less rest and social contact. However, a paradoxical behavior is that neurotics have less escape behavior at the same time. The reason here is that escape is a high level activity, which needs a calm process. Agents should think about which direction to run away. Neurotics are too nervous to let themselves find the best direction to go, they quickly go to the opposite direction.

We consider previous architecture as conscientious agents, which as table 1 shows think more than other agents. This means that they use their reflective level more than others.

Since using reflective level produces a delay in agents' action, they are slower but more accurate in their job.

Finally, we use openness to show the effect of heterogeneous environment. Therefore we use openness as a continuous influence Q-learning to explore more, and stimulate curiosity in routine level.

Knowledge, here q-tables, are shared between different agents in a weighted strategy sharing manner, using equations (1), (2), and (3). Where lifeA, lifeB, opennessA, and opennssB are the cycles that have passed from life of first and second prey, and the openness parameter of first and second prey respectively. The variable temp.qMatrix is the Q-table which will be assigned to both agents.

possibleA=lifeA*(1-opennessA)/(lifeA*(1-opennessA)+ lifeB*(1-opennessB)) (1)

possibleB=lifeB*(1-opennessB)/(lifeA*(1-opennessA)+ lifeB*(1-opennessB) (2)

temp.qMatrix[i][j]=possibleA*qMatrix[i][j]+possibleB*qMatrix[i][j] (3)

The reasons behind these equations are: (1) the older an agent gets, the more experience it has, subsequently its data are much more trustable and (2) an agent with greater openness explores mostly new situations. Hence the possibility of replication of the same state is less than other agents. This means, in the same age, for the same situation, a closer agent doesn't experience that situation, or if it has experienced it, due to the possibility of repetition, most of the time it is more experienced in that situation and its data is more trustable. In addition to the above relation, we leave a condition that, if ij^{th} block of a Q-table of an agent is default value (-1000) and the other one is a positive value, in another word one experienced in a situation, while the other one had no experience in that matter, copy the positive value in both matrices.

We see in table 2 that the max life time of a prey is greater in previous implementation. However, the result of cooperation make the average life time greater in an environment with different openness values.

B. Applications

Cognitive architectures are AI endeavor to create agents with human characteristics. As we can add more human feature, we will get closer to the goal idea of this field. Our attempt in this study was to create agents with emotion and personality. At the same time, we expected them to have an effective relationship with dissimilar agents.

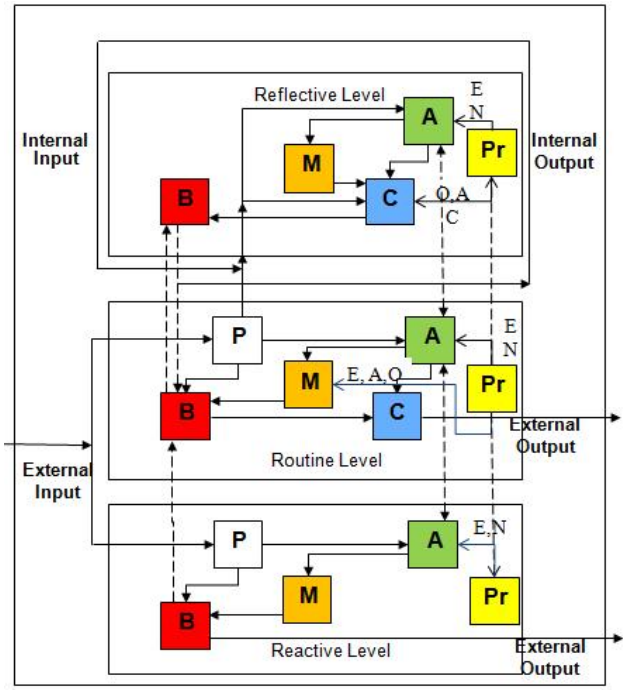

Figure 1. Appending personality (Pr) to three level of information processing architecture, personality in this architecture can influence four functions affect (A), motivation (M), cognition (C) and behavior (B) in three levels reaction, routine and reflective.

TABLE I. THE RESULTS OF THE SIMULATIONS USING DIFFERENT PERSONALITY FACTOR/VALUE

Statistical Results of Simulation	Personality Factor/Value						
	P.V.[a]	*N.D.O*[b]	*E=H*	*E=L*	*N=H*	*N=L*	*A=H*
Average cycle number of the runs	1454.7	2261.6	2623.3	849.4	4214.5	1503	2670.5
Maximum life time of prey in the runs	11,682	8820	9401	1314	11579	1996	13911
Minimum life time of prey in the runs	1	1	1	1	1	1	1
Average of eaten grass by prey per each run	494.1	529.3	574.7	317.4	563.2	623.6	575.9
Percent of eaten prey by predators	41.5	40.7	30.6	56.2	36.5	53.0	29.8
Average number of attacked per each prey	0.66	0.68	0.44	0.42	0.52	1.00	0.53
Percentage number of prey that died due to energy exhaustion	58.50	59.23	69.16	43.8	63.21	46.97	28.82
Average of prey mates per each run	80.9	67.6	61.8	0.0	43.4	47.7	356.9
Average of predators mates per each run	30.1	27.8	17.6	13.5	18.0	32.2	59.4
Average of situations which prey has no behavior per each run	0.0	39.6	29.7	0	17.6	12.9	114.3
Average of social contacts per each run	2141.5	2108.8	1271.9	1434	1207.8	1428	2174.8
Average of sensitivity parameter in reactive level through the runs	5.36	5.08	5.42	6.00	2.26	5.39	5.62

a. Previous Version

b. Normal Distributed Openness

TABLE II. AVERAGE NUMBERS OF SELECTION OF EACH BEHAVIOR PER EACH RUN USING DIFFERENT PERSONALITY FACTOR/VALUE

Behavioral Results of Simulation	Personality Factor/Value						
	P.V.[a]	*N.D.O*[b]	*E=H*	*E=L*	*N=H*	*N=L*	*A=H*
Search for conspecific	109.8	115.4	144.8	46.6	132.5	46.55	135.0
Approach to prey	339.1	335.0	299.6	214.9	261.3	306.7	303.7
Mate	82.9	69.1	63.8	0.0	44.3	48.8	360.4
Search for grass	134.5	92.5	118.4	9.3	110.9	107.5	318.3
Approach to grass	2175.4	2015.1	2507.1	931.3	2188.6	2819.1	3162.5
Eat	2102.6	1847.3	2480.8	1151.5	2444.0	3284.9	2544.6
Opposite direction	2417.9	2525.7	1794.6	587.9	1622.9	0.0	2601.4
Exercise	3790.3	3911.0	4030.5	3612.6	4408.3	5226.6	4527.5
Contact for energy	1088.4	1124.4	581.8	719.9	538.9	700.9	1056.2
Contact for resistance	1097.9	1026.0	725.2	747.1	701.4	760.4	1179.2
Escape	238.6	237.1	270.3	69.8	167.4	1436.3	320.0
Rest	5224.8	5058.2	1786.5	2148.1	1709.1	1733.6	2196.6
Think	11743.3	11726.4	7637.8	7531.2	7820.7	8821.4	9740.0
Search	0.0	103.4	0.0	0.0	0.0	0.0	0.0

a. Previous Version

b. Normal Distributed Openness

There are loads of reasons why researchers work on these kinds of architecture. One is to construct a skeleton for systems with human audience. Another is to prepare the foundation of replacing computer for many human jobs.

There are many applications like virtual tutor [24], trading agents, virtual guides [13], games [18], soccer robots, humanoid robot, and many more which needs architecture with emotion, personality, and perception of other agents in multi-agent environments or real situations.

VII. CONCLUSION AND FUTURE WORKS

Three level of information processing was implemented and detailed by Kazemifard et al. in three levels, and five main functions [2]. The weakness of this implementation was lack of personality function. This paper first studied why this function is needed, and reviewed the work previously done on personality-based architectures. Based on FFM personality model a personality function was proposed in this architecture, implemented and evaluated in predator-prey environment.

Our future work is to add mood and/or cultural features to these agents as well as getting current architecture to work for a virtual tutor environment.

REFERENCES

[1] A. Ortony, D. Norman, and W. Revelle, "Affect and proto-affect in effective functioning," in *Who needs emotions: The brain meets the machine*, J. Fellous and M. Arbib (Eds.), New York: Oxford University Press, 2005, pp. 173–202.

[2] M. Kazemifard, N. Ghasem-Aghaee, and T. I. Ören, "Emotive and cognitive simulations by agents: Roles of three levels of information processing," *Cognitive Systems Research*, vol. 13, pp. 24-38, 2012.

[3] S. J. Russell, P. Norvig, J. F. Canny, J. M. Malik, and D. D. Edwards, "Artificial intelligence: a modern approach," vol. 74, Englewood Cliffs: Prentice hall, 1995.

[4] J. Allbeck, and N. Badler, "Toward representing agent behaviors modified by personality and emotion," in *Embodied Conversational Agents at AAMAS*, 2002, pp. 15-19.

[5] C. Castelfranchi, F. D. Rosis, R. Falcone, and S. Pizzutilo, "Personality traits and social attitudes in multiagent cooperation," *Applied Artificial Intelligence*, vol. 12, pp. 649-675, 1998.

[6] W. T. Norman, "Towards an adequate taxonomy of personality attributes: Replicated factor structure in peer nomination personality ratings," *Journal of Abnormal and Social Psychology*, vol. 66, pp. 574–583, 1963.

[7] C. G. DeYoung, J. B. Hirsh, M. S. Shane, X. Papademetris, N. Rajeevan, and J. R. Gray, "Testing predictions from personality neuroscience brain structure and the big five," *Psychological Science*, vol. 21, no. 6, pp. 820-828, 2010.

[8] W. Zachary, L. Mentec, V. Lordanov, A. Rosoff, J. Stokes, J. Ellbert, and S. Read, "Personality-Enabled Architecture for Cognition (PAC): Architecture and Initial Implementation," CHI SYSTEMS INC FORT WASHINGTON PA, Tech. Rep., 2005.

[9] J. M. Digman, "Personality structure: Emergence of the five-factor model, " *Annual review of psychology*, vol. 41, pp. 417-440, 1990.

[10] C. G. DeYoung, and J. R. Gray, "Personality neuroscience: Explaining individual differences in affect, behavior, and cognition," in *The Cambridge handbook of personality psychology*, pp. 323–346, 2009.

[11] C. G. DeYoung, J. B. Peterson, and D. M. Higgins, "Sources of Openness/Intellect: Cognitive and neuropsychological correlates of the fifth factor of personality," *Journal of Personality*, vol. 73, pp. 825–858, 2005.

[12] A. Ortony, "On making believable emotional agents believable," Trappl et al., pp. 189-211, 2002.

[13] E. André, M. Klesen, P. Gebhard, S. Allen, and T. Rist, "Exploiting models of personality and emotions to control the behavior of animated interactive agents," In Fourth International Conference on Autonomous Agents, 2000, pp. 3-7.

[14] P. Rizzo, M. Veloso, M. Miceli, and A. Cesta, "Personality-driven social behaviors in believable agents," in *Proceedings of the AAAI Fall Symposium on Socially Intelligent Agents*, 1997, pp. 109-114.

[15] P. Rizzo, "Goal-based personalities and social behaviors in believable agents," *Applied artificial intelligence*, vol. 13, pp. 239-271, 1999.

[16] A. Ortony, "The cognitive structure of emotions," Cambridge university press, 1990.

[17] A. Egges, S. Kshirsagar, and N. M. Thalmann, "A Model for Personality and Emotion Simulation," in *Knowledge-Based Intelligent Information and Engineering Systems (KES2003)*, 2003, pp. 453-461.

[18] A. Egges, S. Kshirsagar, and N. Magnenat-Thalmann, "Generic Personality and Emotion Simulation for Conversational Agents," *Computer Animation and Virtual Worlds*, vol. 15, pp 1-13, 2004.

[19] D. Pérez-Pinillos, S. Fernández, and D. Borrajo, "Modeling Motivations, Personality Traits and Emotional States in Deliberative Agents Based on Automated Planning," in *Agents and Artificial Intelligence*, Springer Berlin Heidelberg, 2013, pp.146-160.

[20] S. Talman, "The adaptive multi-personality agent," Ph.D. dissertation, Dept. Comp. Eng., Bar Ilan Univ., 2004.

[21] C. Castelfranchi, F. D. Rosis, R. Falcone, "Social attitudes and personalities in agents," In *Socially Intelligent Agents, AAAI Fall Symposium Series*, MIT in Cambridge, Massachusetts, 1997, pp.16-21.

[22] H. Sabelli, and L. Kovacevic, "Biotic complexity of population dynamics," *Complexity*, vol. 13, pp. 47–55, 2008. 21

[23] W. Huitt, "Maslow's hierarchy of needs," *Educational psychology interactive*, 2004.

[24] E. Haghshenas, A. Mazaheri, A. Gholipour, and M. Tavakoli. "An Intelligent Method for Customizable Adaptive Learning Content Generation," *IJICT International Journal*, vol. 3, pp. 43-55, 2011.